THE U.S. NAVY/BFGOODRICH INTEGRATED MECHANICAL DIAGNOSTICS COSSI PROGRAM - AN UPDATE

Alan Duke
Technical Director, BFGoodrich Aerospace, Fuel and Utility Systems

Mark E. Bailer
USN IMD HUMS Integrated Program Team Leader

LCDR Paul Thitchener
PMA-299 USN Multi-Mission Helicopters Program Office

Uwe Gebauer
PMA-261 H-53 and Executive Helicopters Program Office

ABSTRACT

The goal of the USN IMD HUMS project is to integrate, test, and field a commercial/military "dual use" mechanical diagnostic system from BFGoodrich Aerospace on the H-53, H-60 and H-1 helicopters. This health and usage monitoring system will reduce operational and support costs, improve operational readiness, and increase flight safety through the early identification and correction of degraded components in the engine, drive train, and rotor systems of the helicopter. Key monitoring and diagnostic capabilities of the IMD system are rotor track and balance, engine performance and health, gearbox and drivetrain health, structural usage and fatigue life tracking, and maintenance trending. The system also has provisions for a flight data/cockpit voice recorder. This paper presents a summary of the key programs that led to IMD COSSI, reports on the accomplishments made to date on IMD-COSSI and presents plans for implementing IMD-HUMS in the Navy H-60, H-53 and H-1 helicopter fleet.

INTRODUCTION

The IMD-COSSI project is a Stage I prototype demonstration under the Office of the Secretary of Defense's (OSD) Joint Dual Use Program Office Commercial Operations and Support Savings Initiative (COSSI). The project is managed for the Government by a joint integrated project team from the Naval Air Systems Command, representing the H-53 Helicopters Program Office (PMA-261) and the Multi-Mission Helicopters Program Office (PMA-299).

IMD-COSSI formally began in July 1997 with the signature of a Section 845 "Other Transactions" Agreement between Naval Air Systems Command and BFGoodrich. Developmental testing began for the CH-53E prototype at Patuxent River, Maryland in September 1999, followed by the SH-60B prototype in December 1999.

In the 1999 COSSI competition, OSD awarded additional funds for integration of the BFG HUMS on the Navy/Marine Corps UH-1Y and AH-1Z helicopters and for the Army UH-60-series helicopters.

BFGoodrich Aerospace has been involved in rotorcraft health management and diagnostic system development over the past decade. Its first generation health and usage diagnostic systems were used to prove the advanced processing capabilities being demonstrated in the current generation of Integrated Mechanical Diagnostics Health and Usage Monitoring System (IMD HUMS). Two programs in particular provided the groundwork for the BFG IMD HUMS – The H-60 HIDS and the H-53 EOA.

H-60 HIDS – The H-60 Helicopter Integrated Diagnostics System (HIDS) program was initiated in 1993 by the U.S. Navy NAVAIRWARCENACDIV (NAVAL AIR WARFARE CENTER AIRCRAFT DIVISION) to advance multiple helicopter HUMS technologies [1] on a SH-60F at Patuxent River. This program performed flight and ground testing to demonstrate:

- Acquisition of mechanical diagnostics data to support development and evaluation of diagnostic algorithms.
- Automation of data acquisition, analysis, and communications in a flight worthy system.
- Integration of engine monitoring, gearbox / drivetrain vibration diagnostics, in-flight rotor track and balance, parts life usage tracking, automated flight regime recognition and power assurance checks.

H-53 EOA - BFGoodrich was awarded a contract in April 1996 to install an Integrated Mechanical Diagnostics System (IMDS) on two CH-53E helicopters. The goal of the program was to conduct an early operational assessment (EOA) of BFGoodrich IMDS technology for possible fleet insertion via the CH-53 Lead the Fleet Program.

A complete IMDS system was installed and flight test began in 1998. During the flight test period, the team accomplished the following:

- Acquired Rotor Track and Balance (RTB) influence coefficient data for vibration and blade track (Main rotor and tail rotor)
- Performed RTB trials to validate BFGoodrich RTB capability
- Acquired baseline mechanical diagnostics data including vibration data at traditional locations
- Acquired regime data under known regimes to validate BFGoodrich regime recognition algorithms
- Acquired engine and other aircraft parameters for further analysis

IMD-COSSI - In 1997 BFGoodrich started the development of its current generation health and mechanical diagnostics system. The IMD HUMS development was performed under the DoD Commercial Operations & Support Savings Initiative (COSSI). COSSI programs are used to streamline the weapons systems acquisition process. They emphasize the use of commercial practices to create dual use (military / commercial) products. COSSI programs provide a phased plan for technology introduction. In Phase I, BFGoodrich developed a system to demonstrate both technical and cost benefit / cost avoidance aspects of the system. These include, but are not limited to:

- Decreasing maintenance man-hours per flight
- Improving Aircraft Safety
- Providing aircrews with detailed secondary indication capability
- Increasing availability
- Increasing reliability
- Enabling rapid determination of aircraft status
- Identifying maintenance and logistics actions

The following aspects of HUMS will come with further collection and analysis of data taken from proposed Fleet Installs:

- Identifying failing components prior to catastrophic failure
- Providing support teams with better information for making in field component life extension calls
- Reducing scheduled component removals

Following a successful Phase I demonstration, COSSI programs enter Phase II fleet-wide production. The current IMD HUMS programs with the Navy are completing their Phase I efforts and are transitioning into COSSI Phase II

efforts via a dedicated Operational Test (OT) phase occurring in 2001. COSSI efforts for the Army H-60 and Marine Corp H-1 programs are in Phase I development and are expected to begin transition into Phase II efforts following successful cost benefits analyses and developmental testing.

BFGoodrich has joined forces with Vibro-meter SA (a division of Meggit Aersopace) to design and produce the IMD HUMS. Vibro-meter brings extensive experience in vibration data acquisition and processing to the product.

IMD HUMS FUNCTIONALITY

Typical Functions – The IMD HUMS has been designed to support a variety of health and maintenance related functions. These include:

- Engine Performance Assessment – The IMD HUMS automates traditional engine health checks (HIT check, max power checks, etc.) in accordance with established engine power assurance procedures. Other measures of engine health (temperatures, pressures, chip detection, etc.) are also monitored.
- Rotor Track and Balance (RTB) – Both tracker less and tracker-based RTB operations are supported. Both prompted and automatic data acquisitions can be used to calculate track and balance solutions, on-board or at the Ground Station.
- Absorber Tuning (H-60 only)– Vibration information collected from cabin-mounted accelerometer packages is used to support the tuning of vibration absorbers.
- Mechanical Diagnostics – Vibration information acquired from the drivetrain is analyzed by the IMD HUMS in-flight to ascertain drivetrain health.
- Exceedance Monitoring – Monitoring, annunciation and recording of flight manual-based limit exceedances or other types of limit exceedances (drivetrain vibration levels, health indicators, etc.).
- Usage Monitoring – The IMD HUMS monitors operational usage parameters (engine operating hours, flight hours, etc.) as well as calculating structural usage measures derived from usage-spectra-based regime recognition.

IMD HUMS COMPONENTS

The IMD HUMS is composed of two major elements. On-board acquisition and processing is managed by the On-Board System (OBS), while ground-based maintainer operations are performed in the Ground Station (GS) element (see Figure 1).

On-Board System - The OBS is responsible for collecting, processing, analyzing, and storing data obtained from sensors located throughout the aircraft. The principal element of the OBS is the Main Processing Unit (MPU). The MPU analyzes the input data for exceedances and events, calculates various flight regimes, performs various diagnostic algorithms, normalizes trend data, and stores the data to an onboard data cartridge. The MPU is a VME-based system housed in a ½ ATR enclosure (see Figure 2).

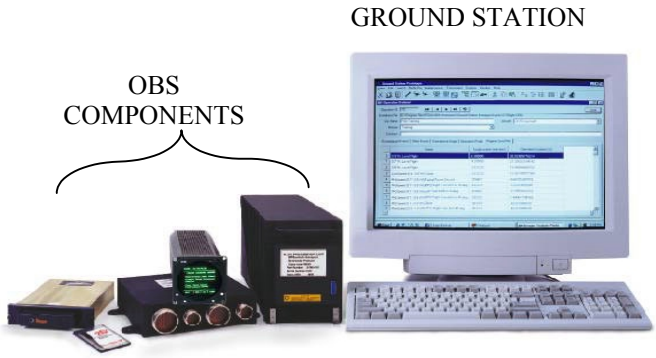

Figure 1 IMD HUMS COMPONENTS

Two specific processors are utilized in the MPU. The primary processing unit (PPU) performs select data acquisition, processing, and communication with external interfaces. The PPU is supplemented with the vibration processing unit (VPU), which performs high-speed data acquisition and processing of vibration (accelerometer) data. The MPU supports a number of bus and signal interfaces (see Table 1). The VPU is supplied by Vibro-meter SA, a division of Meggit Aerospace.

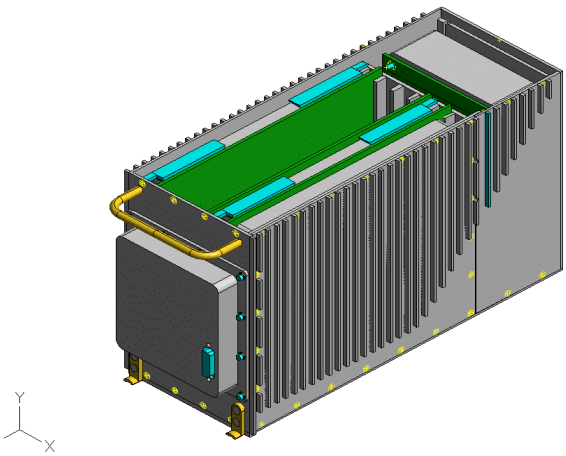

Figure 2 IMD HUMS Main Processing Unit

A user interface is provided via an on-board Control Display Unit (CDU) or other display devices connected through a data bus. This interface allows the operator to view aircraft operating data in real-time and provides password protected maintenance information. Exceedance

alerts and aircraft status data to the aircrew are also provided. In addition, this interface also provides the aircrew with the appropriate prompts for sequencing through the diagnostic operations. The acquired flight data is stored on the IMD HUMS Data Transfer Unit (DTU), a PCMCIA flash memory card device.

IMD Sensors – The existing aircraft sensors are augmented with a set of accelerometer and index sensors used to collect vibration data associated with the rotor system and drivetrain. These sensors are permanently installed on the aircraft to allow continuous monitoring and data collection of vibration data. Accelerometers are mounted on the input and output of each major drivetrain assembly as well as throughout the cabin area.

Remote Data Concentrator - For those aircraft that do not support modern avionics bus communications, a remote data concentrator (RDC) is used to collect the required aircraft signals. The RDC has been specifically designed to collect a wide variety of signal types found on aircraft (see Table 2). The MPU can support data collection with up to three RDCs.

Table 1. MPU Interfaces

Interface Type	Number
MIL-STD 1553 (type A or B)	1 redundant bus
ARINC 429 Tx	4
ARINC 429 Rx	14
RS-422	4
RS-232	2
RS-485	2
ARINC 717	1
Frequency / Tach	12
Index	8
Accelerometer	46

Table 2. RDC Interfaces

Signal Type		Available
Discrete Input		48
Synchros		4
AC Signal		16
DC Signal		32
ARINC-429	Inputs	1
	Outputs	1

Ground Station - The GS is the primary user interface with the HUMS system. It is responsible for logging and maintaining all flight and maintenance data, generating aircraft maintenance-action forms based on flight data, performing aircraft configuration and parts tracking, generating engineering and management reports, and archiving data.

The GS is hosted on a networked server / workstation environment. The minimum Server hardware requirements are:

Hardware
- Dual 400MHz Pentium II Processors w/512K Cache.
- 24-X CD-ROM Drive,
- 512Mbytes of installed RAM.
- Six 9.0Gbyte Hard Drives
- Network interface

Software
- WindowsNT Server 4.0, Build 1381, Service Pack 4.
- WindowsNT Server Resource Kit.
- Oracle RDBMS 8.0.5.0.0.

The minimum client workstation hardware requirements are:

Hardware
- 266 MHz Pentium II processor
- 256 Mbytes of installed RAM
- PCMCIA Card Reader
- Network interface
- 20X CD ROM Drive
- 9 Gbyte Hard Drive

Software
- WindowsNT Workstation 4.0, Build 1381, Service Pack 4.

Microsoft Data Access Components Version 2.0 Service Pack 2.
- Oracle Client 8.0.5.0.0.

GBS functions include:

- DTU Initialization and Download
- Parts and Maintenance Configuration Tracking
- Usage Calculations/Updates
- Condition Indicator Extraction
- Drivetrain, Rotor and Cabin Absorber Diagnostics
- Data Graphing, trending, and Reporting
- System/User Administration
- Interfacing to external Applications (Interactive Electronic Tech Manuals, Customer Configuration / Maintenance Management Systems)

CURRENT NAVY IMD-HUMS PROGRAMS

Navy/Marine Corp H-53E – The first aircraft to use the newest generation IMD HUMS was the Marine Corp CH-

53E Super Stallion. A complete suite of HUMS functionality is supported by the IMD HUMS. This includes:

- Exceedance Monitoring & Processing
- Rotor Track and Balance Monitoring
- Rotorhead Monitoring
- Swashplate Vibration Data Collection (only on the Developmental Test aircraft)
- Tail Rotor Drive Shaft Monitoring
- Engine Monitoring, including Engine Power Assurance, Engine Life Usage and Engine Over Temperature Monitoring
- Powertrain Monitoring, including Traditional Vibration Analysis Operations as well as Advanced Mechanical Diagnostics Monitoring
- Drive Shaft Monitoring
- Free Wheeling Unit (FWU) Monitor
- Operational Usage Monitoring
- Structural Usage Monitoring
- Naval Aviation Logistics Configuration Management Information System (NALCOMIS) Interface

The CH-53E IMD HUMS uses the BFG MPU and DTU device. As the CH-53 is not a fully bussed aircraft, two RDCs are used to collect the requisite discrete signals, angular rates, attitude angles, body-axis accelerations, fuel quantities, pressures, and temperatures. The MPU is configured as a MIL-STD-1553 Remote Terminal. As such, it collects a variety of flight parameters. Crew display is accommodated using the CH-53E Control Display Navigation Unit (CDNU). 32 accelerometers / index sensors were distributed throughout the drivetrain to collect vibration data. A total of 6 engine accelerometers and 3 cabin accelerometer packages were also installed to collect engine and cabin accelerations. The locations of the IMD HUMS Line Replaceable Units (LRU) are presented in Figure 3.

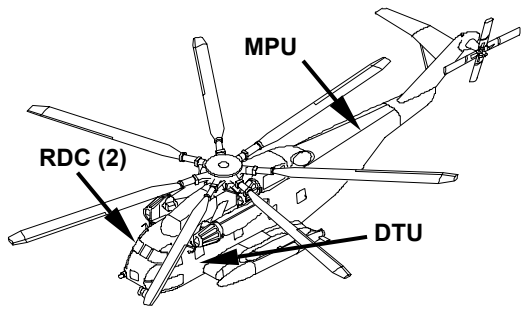

Figure 3 Location of IMD HUMS LRUs on the CH-53E

The Marine Corp CH-53E IMD HUMS completed 144 hours of Developmental Test (DT) in 2000. This testing emphasized functional evaluation and demonstration of IMD HUMS. More detailed test results are attached in Appendix A. Of specific interest were fault insertion tests of the rotor system. Tests were performed to assess the system's ability to identify the proper maintenance actions required to correct out-of-balance conditions on the main and tail rotors, and out-of-track conditions on the main rotor. A series of flights were flown with pre-selected main and tail rotor track and balance adjustments. The values of these pre-selected adjustments were based on solutions provided by the Sikorsky Blade Track and Balance (SBTB) software. By knowing the baseline value of the aircraft's track and balance condition, simulated changes to pitch change rods, trim tabs, and rotor hub weights can be made in the SBTB software until a predicted fault value matches the desired fault value (typically 5% lower than the flight clearance limit). In the case of the tail rotor, only hub weights were adjusted and a series of vibration polar plots were be used to determine predicted vibration levels. The adjustments that resulted in the desired fault value were then made to the aircraft. Once the changes to the rotor system were made, the aircraft was flown (ground turns only for tail rotor adjustments) and the IMD HUMS provided an adjustment that returned the rotor system to within Maintenance Instruction Manuals (MIMS) limits within an average of 1.2 test flights. This testing was repeated for both sets of algorithms (with and without main rotor tracker) used by the IMD HUMS.

The CH-53E IMD HUMS has successfully completed the initial phase of developmental testing, DT-IIA. The next phase, DT-IIB, is currently ongoing and following its' successful completion, the program will transition into the final developmental test phase, DT-IIC. Immediately after completion of DT, the program will enter into the Operational Test (OT) period. OT will occur during Q3 and Q4 2001. An additional 3 CH-53E will be fitted with the IMD HUMS for the OT program. A milestone decision that approved entering into Low-Rate Initial Production (LRIP) was made in September following successful completion of the DT-IIA test phase. Subsequently, a LRIP contract for an additional 20 IMD HUMS Systems was awarded in January 2001. Installations of the initial production systems will start after the OT installations are complete.

Navy SH-60B – Concurrent with the development of the CH-53E IMD HUMS was the development of the Navy SH-60B Seahawk IMD HUMS. Developmental testing of the SH-60B IMD HUMS started in February 2000. As with the CH-53E platform, the testing emphasized functional evaluation and demonstration of IMD HUMS (engine checks, usage, RTB, exceedance detection, and mechanical diagnostics). More detailed test results are attached in Appendix A. Of most interest were the flights used to assess the system's ability to execute diagnostics currently

performed in the U.S. Naval Aviation Vibration Analysis Program (NAVAP)[4]. The Vibration Analysis Test Set (VATS) currently performs these procedures throughout the H-60 and H-53 fleet. The VATS system is not hardwired and is a time consuming process for the maintainers to install. Current maintenance practices are based upon calendar days and aircraft hours flown. IMD HUMS will transition to "on condition" maintenance. That is, the maintenance will be performed based upon the aircraft condition and the actual usage of life time parts. In addition to evaluating the capability of the IMD HUMS to perform output shaft balancing and vibration absorber tuning operations, the IMD system will detect miss-shimming of the SH-60B's Thomas couplings (both for tail rotor drive shaft (TRDS) and the input to the intermediate gearbox (IGB)).

The SH-60B IMD HUMS utilized the same basic elements as that of the CH-53E, but configured specific to SH-60B interfaces and operations. As with all IMD HUMS applications, the BFG MPU and DTU were installed on the SH-60B. The SH-60B required only a single RDC (owing to the need to collect data from 2 engines on the SH-60B versus 3 engines on the CH-53E). 22 accelerometers / index sensors were distributed throughout the drivetrain to collect vibration data. These signals are wired directly to the MPU and do not utilize the DTU. A total of 4 engine accelerometers and 3 cabin accelerometer packages were also installed. The SH-60B IMD HUMS was configured to act as a MIL-STD-1553 Bus Monitor to collect requisite flight parameters. Unlike the CH-53E, crew display functions are handled with a dedicated display provided by the BFG Avionics Cockpit Display Unit (CDU). The locations of the BFG IMD HUMS LRUs on the SH-60B are illustrated in Figure 4.

The Developmental Test (DT) phase of the SH-60B IMD HUMS is expected to be complete Q3 2001. The Operational Testing (OT) for the SH-60B IMD HUMS will occur Q4 2001. An additional two SH-60 aircraft will be fitted with the IMD HUMS for the OT program on the West coast.

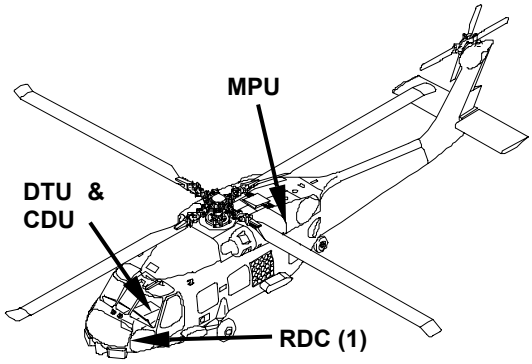

Figure 4 Location of the IMD HUMS LRUs on the SH-60B

It is intended to install additional kits on an SH-60B, SH-60F and CH-60S at Patuxent River and a further two fleet aircraft on the East coast. These additional HUMS aircraft assets will provide data collection in the Operational Test phase as well as provide extra aircraft to install JAHUMS (Joint Advanced HUMS) modules.

These aircraft will form the core aircraft that will assist the Navy in making a Full Rate Production decision. The Army will also consider the successful test and evaluation of the CH-60S due to the relative similarity of the airframes with the Blackhawk. Finally the CH-60s will be used as the initial HUMS test bed for the fully integrated Common Cockpit SH-60R solution.

Marine Corp AH-1Z and UH-1Y - 1999 also saw the beginning of the IMD HUMS integration development into the AH-1Z Cobra and UH-1Y Huey platforms. This introduction is occurring concurrent with the introduction of the H-1 Upgrades program. When complete, the H-1 IMD HUMS integration will represent the first introduction of the IMD on a fully bussed aircraft. An RDC will not be utilized since all aircraft data is available via the existing H-1 MIL-STD-1553 databus. Owing to the commonality in the H-1 Type, Model, Series (TMS) avionics design by the Bell / Litton team, the IMD system design for both the AH-1Z and UH-1Y are nearly identical, except for some minor parameters differences.

The current IMD HUMS program on the H-1 platforms will demonstrate the ability of the system to operate autonomously. Sets of accelerometers and index sensors are mounted on the drivetrain and in the cabin to collect vibration signals. In the initial program phase, the IMD HUMS will not interface with any of the displays in the H-1 cockpits. Rather, all operations will be implemented as automatic procedures, not requiring any pilot interaction. As with the other systems, the resulting data will be collected and written to the DTU memory card for processing on the ground. An important aspect of the H-1 program is to collect vibration data to support the development of mechanical diagnostics limits and health indicators.

The first flight of the H-1 IMD HUMS will occur August 2001. Flight-testing is scheduled to be completed by July 2002. Following a successful evaluation of the IMD HUMS, it is hoped that the system will be fully integrated with the aircraft cockpit displays, allowing the system to also perform prompted procedures, such as on-demand engine power assurance checks.

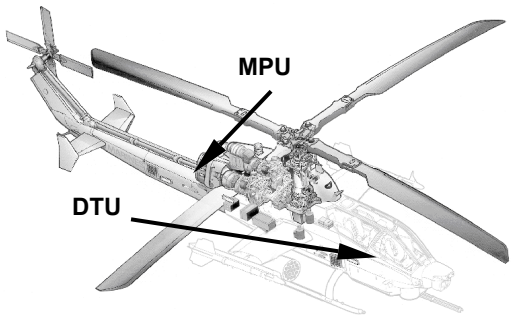

Figure 5 Location of the IMD HUMS on the Marines AH-1Z

NALCOMIS - The IMD HUMS Ground Based System will interface with the Naval Aviation Logistics Command Management Information System to provide a complete equipment management solution. NALCOMIS is the NAVY's squadron-level version of a standard aviation maintenance management information system. It is currently being upgraded to the newer version, known as Optimized NALCOMIS OMA. NALCOMIS includes functions for maintenance management and record keeping and quality assurance. The IMD system is intended to reduce operation and support costs by providing timely and accurate information to aircraft fleet operators, maintainers, and flight personnel regarding the maintenance and serviceability of their aircraft. NALCOMIS automates maintenance activities scheduling and facilities maintenance action recording. Users can generate maintenance forecast and maintenance history reports for any collection of aircraft or assemblies, providing for timely and opportunistic scheduling of maintenance activities.

OTHER HUMS APPLICATIONS

Army UH-60A and HH-60L – In 1999, BFG was awarded a contract to reapply the SH-60B IMD HUMS product to the Army UH-60A and HH-60L Blackhawk aircraft. The IMD HUMS LRU complement used on the Army Blackhawk is similar to that used on the SH-60B. There are two main differences in the Army and Navy applications:

- Differing avionics components, engine-variants, and transmissions.
- Differing business-rules of each service. (Army does not Use NALCOMIS)

One of the key points of the IMD HUMS to be evaluated is the interchangeability of the system components regardless of the model rotorcraft on which they are installed. This interchangeability / interoperability will be demonstrated across the UH-60A and HH-60L platforms, with further supporting analysis from the Navy IMD HUMS programs. The sensors and the LRUs are identical, although each IMD HUMS installation generally consists of different numbers of the sensors. This is also true of the basic software. The only differences between software loaded into specific helicopter models are the platform-specific configuration tables. Therefore, if the services use the IMD-HUMS, the government's cost of ownership will be reduced because of the interchangeability of components.

The first flight for the UH-60A IMD HUMS is planned for late-March 2001. Flight testing for the UH-60A IMD HUMS is to be completed by Q3 2001. Operational checks of the HH-60L IMD HUMS will start May 2001. Unlike the Navy programs, there will not be any dedicated OT program for the Army IMD HUMS. The Army anticipates leveraging the OT results from the Navy SH-60B tests in support of its evaluation of the operational performance of the IMD HUMS.

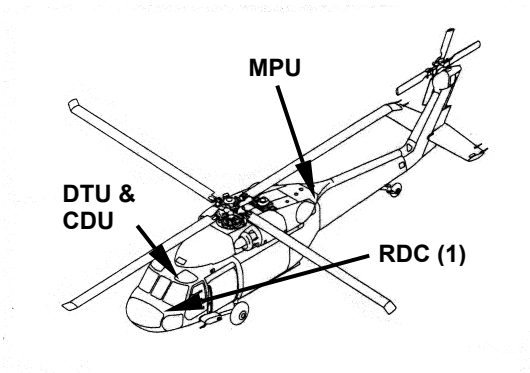

Figure 6 Location of the IMD HUMS on the Army UH-60A

Commercial Applications - BFGoodrich is also applying the IMD system to the Sikorsky S-92, and S-76 and has proposed S-70 applications for two operators.

Joint Advanced HUMS (JAHUMS) - JAHUMS is an Advanced Concept Demonstrator that is linked to the HUMS program and the SH-60B undergoing test at Patuxent River. The JAHUMS modules provide the USN with the groundwork to replace aging avionics with 3rd party modules. This important modularity allows the USN to seek existing technologies that can be inserted into existing systems with minimal research and development.

JAHUMS Technology has five modules. These include (1) the CV/FDR, (2) Sikorsky's Integrated Support System for T700, (3) SEI's Smart Monitor System, (4) Virtual Sensor System, and (5) Neural Network Drive Train Module. The first three of the five modules have undergone bench testing at BFG. A brief description of these modules follows:

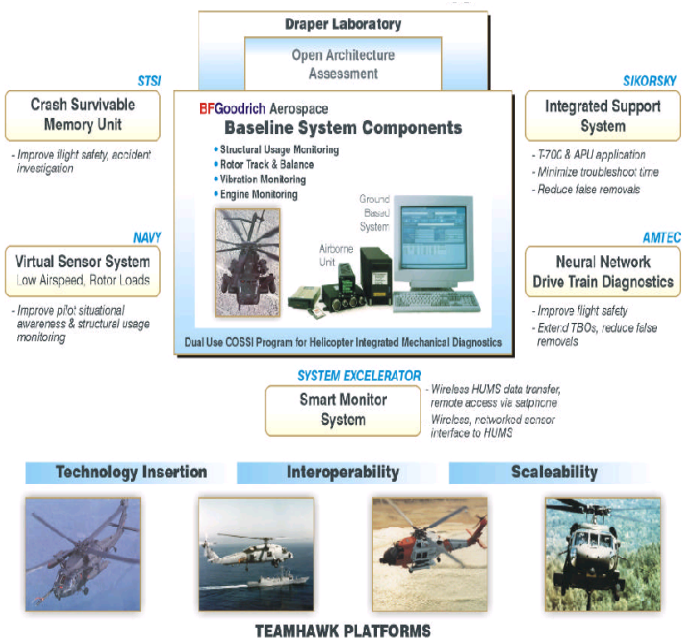

Figure 7 JAHUMS Projects

(1) CV/FDR - A flight ready CV/FDR will be delivered by SMITHS (formerly STSI) at the end of January 01. The CVFDR provides continuous voice monitoring and a flight data recorder that may be used for accident investigation and prevention through appropriate feedback to all pilots. BFG expects to complete a final system/bench test in Feb and then the system will be ready for install at Patuxent River. A Flight Clearance package is expected to be approved by the USN by March 01.

(2)T700 Integrated Support System - Sikorsky and BFG will provide advanced engine diagnostics through this module and have completed software integration into the OBS and are working on the GS software integration. They expect to complete integration and system testing on the bench at BFG by Feb and will be ready to install at Patuxent River in March 01.

(3) Smart Monitor System– Via RF data links, provides capability to feedback information real-time back to the Squadron or ship prior to return thus shortening the maintenance downtime through early preparedness. SEI has their avionics HW built but still needs to finalize their antenna selection & placement. Although further bench tests are required the wiring installation is expected to be ready by April 01

(4) The Virtual Sensor System - provides for indications of low airspeed that may put the aircraft and aircrew in potentially hazardous situations such as vortex ring state. The VSS (SW only) will undergo bench testing at BFG in late February and could be ready for install at Patuxent River by April 01 .

(5) The Neural Network Drive Train Module - (adding a VME -card inside the box) will provide the capability to carry out advanced algorithm processing to assess the health of critical flight components and will not undergo bench testing until the other modules have completed bench testing.

The intention for the JAHUMS modules is to install Modules 1,2,3 and possibly 4 in April 01. The USN does not anticipate substantial flight testing to be required and the technology modules could rapidly transition onto demonstration SH-60 aircraft in the fleet once the IMD HUMS is installed.

FUTURE US NAVY PLANS

The USN intends to install the HUMS units on its entire fleet of CH-53E, MH-53E, SH-60B, SH-60F, HH-60H, CH-60S, SH-60R, UH-1Y, and AH-1Z aircraft. The basis for the CH-53E and SH-60B Type Model Series aircraft installations is a successful Operational Test.

Due to operational commitments, the installation rate for the SH-60B, SH-60F and HH-60H will be managed by looking initially at aircraft going into extended maintenance periods as well as those aircraft that are not initially earmarked for the SH-60R re-manufacture.

Due to the data bus commonality between the SH-60R and CH-60S, the solution for both aircraft will be identical apart from HUMS LRU locations. As the CH-60S is currently rolling off the production line, it is expected that the CH-60S aircraft currently at Patuxent River will be used to test and evaluate a HUMS solution modeled on the SH-60B and flown in conjunction with the SH-60B OT.

NALCOMIS - NALCOMIS will be used to track IMD HUMS data for individual components. Once enough data has been collected and appropriate analyses conducted, the goal is to transition the individual components to a condition based maintenance process.

FOQA - The NAVAIR team is pursuing the software capability to download the HUMS and CVFDR data to allow Flight Operations Quality Assurance (FOQA) at HUMS (and CVFDR) installed Squadrons. This extra function will provide an entire new dimension to the HUMS capabilities that goes beyond maintenance and into the operational domain. Evidence from commercial airlines using FOQA for training are beginning to show substantial safety and operational benefits.

CONCLUSION

The IMD HUMS has become reality under an aggressive schedule due to the close cooperation between user and provider. The Integrated Program Team concept which united US NAVY, US Marine Corps, and BFGoodrich team members has developed a system, which will fulfill the promise of improved operational readiness and flight safety with reduced maintenance requirements. A full rate production decision will allow the outfitting of all Navy/Marine H-53E and H-60 aircraft. This program will also serve as a prototype for additional savings to be realized by installing similar systems on a much wider variety of complex aircraft and ground vehicles.

REFERENCES

[1] **Hess**, A., **Hardman**, J., **Neubert**, C., "SH-60 Helicopter Integrated Diagnostics System (HIDS) Program Experience and Results of Seeded Fault Testing", presented at the American Helicopter Society 54th Annual Forum, May **1998**.

[2] **Hess**, R., **Chaffee**, M., **Page**, R., **Roseberry**, K., "Realizing an Expandable Open HUMS Architecture", presented at the American Helicopter Society 56th Annual Forum, May **2000**.

[3] *HUMS Open Systems Specification*, BFGoodrich Aerospace, E-3424, August 30, **1999**.

[4] *Organization Maintenance Vibration Manual, Navy Models SH-60B, SH-60F, HH-60H*, Naval Air Systems Command, A1-H60CA-VIB-000.

[5] **Ventres**, S., **Hayden**, R., "Rotor Tuning Using Vibration Data Only", presented at the American Helicopter Society 56th Annual Forum, May **2000**.

[6] *NATOPS Flight Manual, CH-53E Helicopter*, Naval Air Systems Command, A1-H53BE-NFM-000.

Appendix A

TEST RESULTS

Rotor Track and Balance – The ability of the IMD HUMS to automatically recognize and collect rotor track and balance (RTB) data during normal flight provides one of the most beneficial cost savings /avoidance mechanisms of the entire IMD HUMS system. The system has demonstrated both tracker-based RTB and trackerless[5] rotor tuning functions on both the H-53 and H-60 platforms.

Data from fault tests were used to evaluate RTB and rotor tuning operations. Tests were performed with a variety of fault inputs. These include:

- Weight faults
- Single / Multiple PCR faults
- PCR and tab faults
- Complex faults (weights, PCR and tab changes)

The generic requirement for the IMD HUMS to correct the rotor fault is within two sets of maintenance adjustments. In general, IMD HUMS will provide a RTB solution from data automatically collected onboard the aircraft and arrive at a solution with at most a single check flight. This eliminates the need to fly specialized RTB data collection flights.

The RTB solution computed from the IMD HUMS is the solution that optimally minimizes the mean square error across all flight conditions. One aspect of the IMD HUMS that differentiates it from conventional RTB tools is its ability to generate RTB solutions using higher shaft order information. This approach allows the IMD HUMS to achieve excellent RTB and rotor tuning solutions within a single attempt.

In general, the IMD HUMS was able to correct the inserted faults. In all cases, the IMD HUMS system was able to reduce vibrations to within 0.3 ips limits (inserted faults drove the single axis vibration levels up between 0.309 ips and 0.698 ips).

The polar plots in Figures A-1 and A-2 illustrate actual vibration level reductions across flight regimes realized by the IMD HUMS. Again, a series of faults were inserted into the rotor system. Vibration levels were measured before and after the IMD HUMS solution was implemented. In all cases, the IMD HUMS was able to successfully reduce the vibration levels to within specified limits.

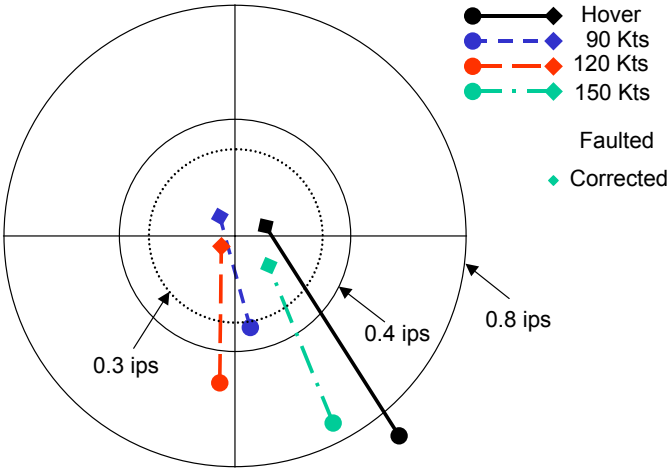

Figure A-1 Comparison of faulted and IMD-corrected rotor lateral vibration levels.

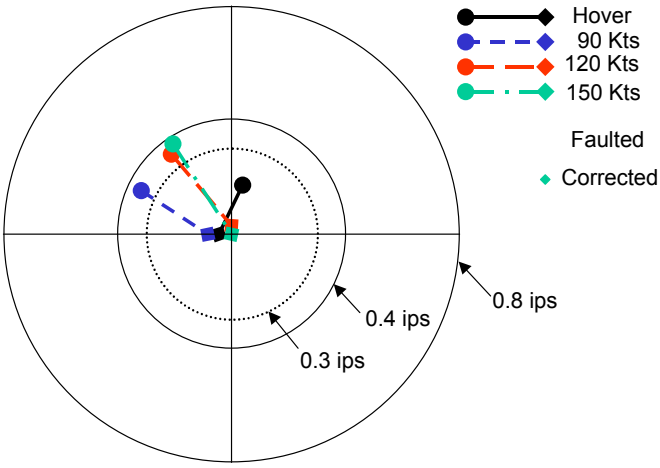

Figure A-2 Comparison of faulted and IMD-corrected rotor vertical vibration levels.

Blade track spread was also reduced to within specified limits during these trials. Although the IMD optical blade tracker was disconnected during trackerless balancing trials, the HUMS was able to control the track spread to less than 2.5 inches in all cases (as measured by the VATS camera).

Mechanical Diagnostics - *Mechanical Diagnostics* - Onboard monitoring of aircraft drivetrain vibrations typically requires analysis of both faulted and unfaulted drivetrain data. This collection and analysis has been initiated on the CH-53E, SH-60B, UH-60A and H-1 programs.

Ongoing efforts are taking place to fine tune the COSSI mechanical diagnostics system. Data studies based upon the legacy system as well as the COSSI system are necessary to define robust algorithms and logic to determine the health of helicopter components.

These algorithms, which have been developed over time, are descriptors of the mechanical health of a system. Residual signal kurtosis (as depicted in figure A-3) is such an algorithm shown to be a good metric of gear condition. The first example of this indicator is from the legacy data collection system used in a seeded fault study. This indicator shows stability during healthy operation with drastic increase as faults propagate. When compared to thresholds, indication of impending failure happened 3 hours prior to catastrophic failure.

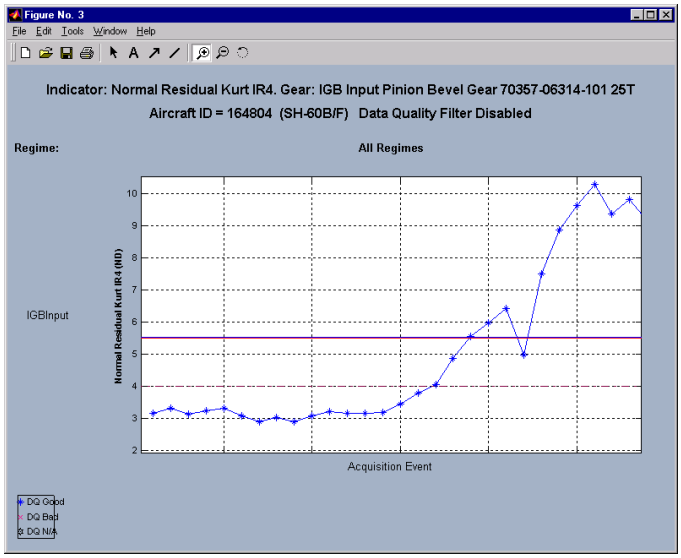

Figure A-3 Example of Faulted Data

The residual signal is based upon synchronous signal averaging, which is performed on a carrier shaft basis. The expected tones are then removed from the signal. Statistical indicators of the "residual" are then computed. This type of processing is a sensitive measure of increasing amplitudes of gear mesh sidebands and increasing numbers of sidebands,. Both are known phenomena of gear failure modes. The next figure (A-4) shows indicator stability across flight conditions on the EOA and COSSI CH-53E test plane. Indicators that are utilized to assess system health show consistency between acquisition systems.

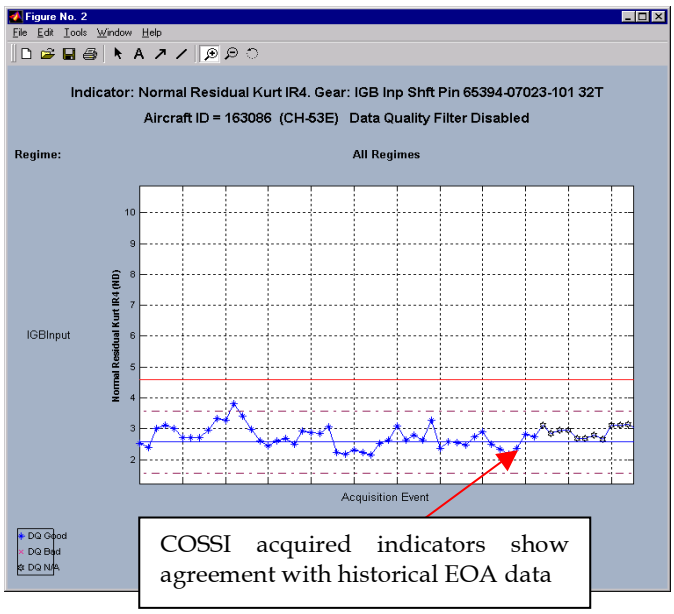

Figure A-4 Condition Indicator Stability

As sensitive to gearing faults as the residual signal tends to be, residual analysis provides no way of classifying an individual gear, if several gears happen to reside on the same shaft. This dilemma has demonstrated need for verification/classification algorithms to uniquely identify the fault source. The COSSI system has several types of algorithms, which detect and classify faults to a specific component and fault type. This multiple algorithmic logic provides a more robust algorithm with high early fault detection ability, a low rate of false alarms, the ability to uniquely identify specific faulted components, and to identify the different modes of failure.

The COSSI system acquires vibration data automatically during a flight. The COSSI system categorizes the acquisitions into flight conditions. Flight condition data is returned to the Ground Station. This data allows extensive correlation to be made based on the relationships of flight parameters and vibration results.

Along with robust algorithms and intimate flight condition information, the COSSI system performs checks on the quality of the sensor data. These data quality measurements are invaluable in providing confidence in the results of the health algorithms. The COSSI data quality indicators are able to detect sensor wiring problems, degraded sensor elements, and soft or loose sensor mounting fixtures. These data quality indices were useful in diagnosing a sensor wiring problem on the CH-53E helicopter.

COSSI Mechanical Diagnostic algorithms have shown to correlate with the classical NAVAP procedures. Selected

points, related to important frequencies, of a discrete Fourier transform in the classic NAVAP system are compared with the equivalent mechanical diagnostic signal averaging routine. The following figure (A-5) shows the NAVAP system trend of the 71.2 Hz frequency bin. This corresponds to the Intermediate Gearbox input frequency.

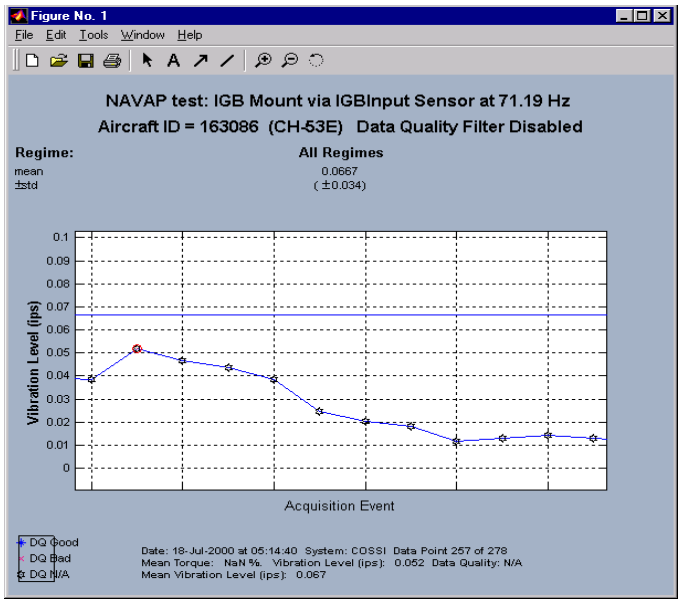

Figure A-5 COSSI NAVAP Results

This shows a value of 0.052 IPS on July 19th, 2000. The COSSI Advanced Mechanical Diagnostic acquisition was also performed on that date. The figure A-6 is a depiction of the AMD trend of the signal averaged shaft order 1 for the Intermediate Gearbox Input Shaft (71.2 Hz) over the same date range.

The amplitude measured on July 19th, 2000 for the equivalent COSSI advanced mechanical diagnostic algorithm was 0.062 IPS. The actual value is not as important as the consistent correlation (shape of the curve) between the two systems.

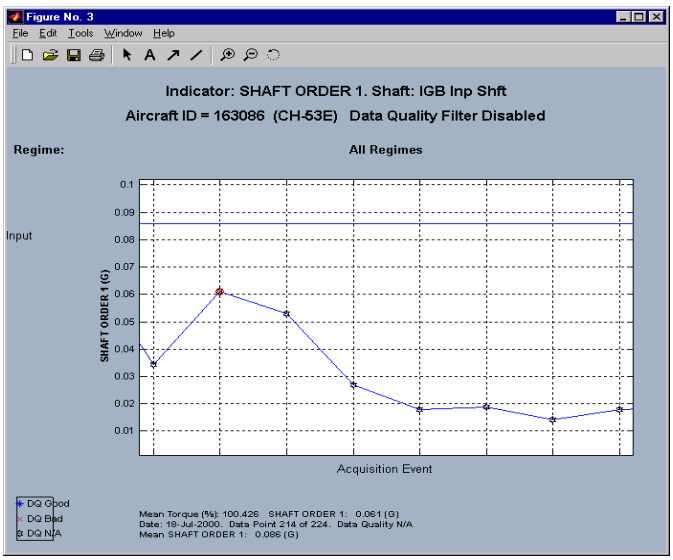

Figure A-6 COSSI Shaft Order 1 Indicator Trend

Engine Power Assurance - Another aspect of the IMD HUMS is its ability to extend engine power assurance testing. The processing power of the MPU and the variety of signals made available to the IMD HUMS allows the IMD HUMS to automate many traditional power assurance checks. In addition, the system can also support determination of many power indices. An example of the ability to automate engine performance checks is presented in figure A-7. This example illustrates the ability of the IMD HUMS to automate four-point engine checks [6] supported on the CH-53E. The four-point check consists of collecting and recording various engine parameters at a series of engine temperature conditions. This information is traditionally recorded into the aircraft logbook for later analysis by the aircraft maintainer.

The IMD HUMS automates the process by guiding the operator through the test procedure, automatically collecting and recording the requisite data, and performing the data analysis onboard. With the system, the results of the four-point check can be displayed to the operator. Generation of any engine-related maintenance actions associated with the testing is also automated within the IMD HUMS ground station.

Figure A-7 CH-53E IMD HUMS four-point results display

Ground station Operations - The ability of the IMD HUMS to support maintainer operations is primarily managed within the IMD HUMS ground station. A wide variety of data is downloaded to the IMD HUMS ground station. This includes:

- Exceedances
- Events
- Operation Usage
- Structural Usage
- Operational Regimes
- Onboard System Faults
- Signal Data
- Computed Data
- Drivetrain Vibration Data
  - Condition & Health Indicators
- Rotor Track and Balance Data
- Absorber Tuning Data (H-60 only)
- Shaft Balancing Data (H-60 only)

The ground station automates the transfer of this information from the PCMCIA datacard. During this download operation, the data is analyzed and is used to support pilot debrief operations (see Figure A-8). The maintainer can get an immediate view of the status of the aircraft and whether something occurred which requires attention.

Normally, the maintainer would not be exposed to detailed flight information. However, the ground station user interface has been designed to support more detailed analyses. The maintainer and engineering analysts can drill down through the data to get more detailed information, such as those provided in time histories (see Figure A-9) or as trend plots. Not only does the ground station support status and overview operations, it provides diagnostic capabilities to compute RTB solutions and analyze mechanical systems problems.

The ground station also supports administrative operations (card initialization, data archiving, report generation) and configuration management (parts tracking) and maintenance management tasks.

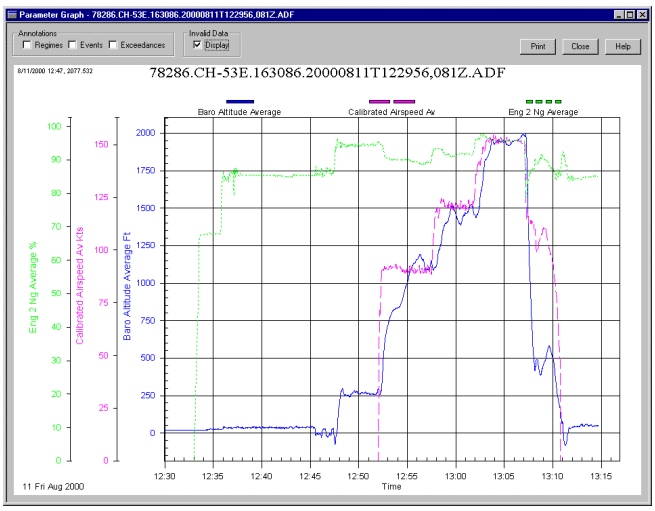

Figure A-8 GS Debrief Screen

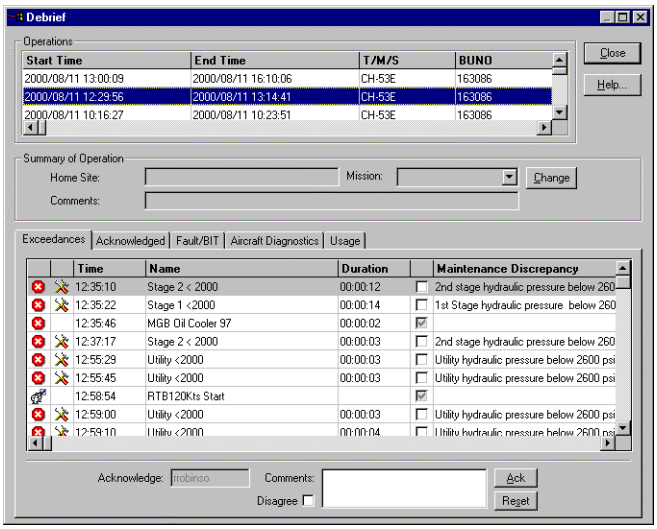

Figure A-9 Sample time history plotting screen on the IMD HUMS groundstation